ISSN 2395-1621

Design & Fabrication of Integrated Steering Systems

#1Devendra Trivedi, #2Jayesh Kolhe, #3Dileep Soni, #4Aditya Khot

1trivedi.devendra96@gmail.com
2jayeshkolhe8@gmail.com
3soni121dileep@gmail.com
4adityakhot4@gmail.com

#1234Department of Mechanical Engineering

PCET's Nutan Maharashtra Institute of Engineering & Technology.

ABSTRACT

This aims towards the alternative solution on the Zero Turn Vehicles. If we only changing the wheel system instead of total steering system, that is more convenient for the vehicle. Actually Zero Turn Vehicle system used in Jeep Hurricane. In that the wheel positioning system was directly connected to the steering system, due to that reason steering system was more complicated. So, we try to solve that problem by new concept of Zero Turning Four Wheel Mechanism with mechanical linkages operated system. Means in that mechanism positioning of the wheels will be directed by the central wheel positioning 12V DC geared motor. And due to that concept it is easy to changing position of wheel. The vehicle can rotate at their center position in 360 degrees. And if any vehicle rotate in at 360 degrees, then it will easy to solve the parking problems in at public places, malls, multiplexes etc.

Keywords: Zero Turn Mechanism, Steering Wheel Configuration, Turning Radius, controller, sensor.

ARTICLE INFO

Article History

Received: 25th December 2017

Received in revised form :

25th December 2017

Accepted: 28th December 2017

Published online :

28th December 2017

I. INTRODUCTION

This project is about design and fabrication of integrated steering systems rotating vehicle. As it is also battery operated car thus no fuel is required. Hence it is economical to the environment. This will also reduce the cost of the car. This vehicle moves in all directions and this design provides better comfort and also saves the time of customers, most of the people using this vehicle to carry goods, patient etc. But most of the time, they have to face the problem like taking U turn etc. So have to design a 360 degree wheel rotating vehicle to reduce and eliminate problems in the industry and at the railway platform. Zero degree turning radius of a vehicle implies the vehicle rotating about an axis passing through the center of gravity of vehicle i.e. the vehicle turning at the same place, where it is standing. No extra space is required to turn the vehicle. So vehicle is to be turned in the space equal to the length of the vehicle itself. In this system, steering is connected to sprocket and this sprocket is connected to sprocket of front wheel by chain drive. Steering is used to provide the direction of front wheel. The DC motor is connected to sprocket bolt at above of frame. When power supply from battery to DC motor then rotary motion transfer from DC motor to the wheel. The bearings are provide below sprocket which allow to wheel rotate 360 degree about vertical axis. Then this same rotary motion is transfer to the rear wheels by sprockets and chain drive arrangement. So as a result this arrangement of the vehicle wheels to turn 90 degrees left and 90 degree right from original position, but front wheels of this vehicle rotate 360 degree by steering, sprocket and chain drive arrangement. Without moving from the spot, i.e. the vehicle has zero turning radius. This helps in maneuvering the vehicle in tight spaces such as parking lots and within small compounds.

The various functions of the steering wheel are to control the angular motion the wheels, direction of motion of the vehicle, to provide directional stability of the vehicle while going straight ahead, to facilitate straight ahead condition of the vehicle after completing a turn, the road irregularities must be damped to the maximum possible extent. This should co-exist with the road feel for the driver so that he can feel the road condition without experiencing the effects of moving over it.

All electric concept of vehicle is that if it becomes a reality would prove to be a lot of fun to drive in the city. The vehicle runs on small electric motors, four motors attached separately to four "wheels" the wheels are actually spheres and can rotate 360 degrees around itself like a helicopter. The car is designed for a person taking small trips, probably around a city, who needs to move quickly and nimbly around obstacle like yellow cabs and bicycles. Maybe the coolest thing about the car is that the doors open. May be Doc Brown could use this electric beauty for some future time travelling flicks. The car's spherical wheels are identical and are magnetically coupled they are controlled by magnetic fields which allow the car to rotate quickly and efficiently. Though we haven't taken a peak at the inside we hear it's pretty chic. We only have one issue with this design. It may be great with obstacles in front of you but it doesn't look like it could handle a pothole very well. The clearance is quite low and because the "spherical" wheels don't lift you off the ground like regular wheels those pot holes or unexpected curbs could prove to be a problem while you're speeding around the city. developed in Automobile industry for the effective turning of the vehicle and to increase the manuverbility. In a typical front wheel steering system the rear wheels do not turn in the direction of the curve and thus curb on the efficiency of the steering. In four wheel steering the rear wheels turn with the front wheels thus increasing the efficiency of the vehicle. The direction of steering the rear wheels relative to the front wheels depends on the operating conditions. At low speed wheel movement is pronounced, so that rear wheels are steered in the opposite direction to that of front wheels. At high speed, when steering adjustments are subtle, the front wheels and the rear wheels turn in the same direction.

II. PROBLEM STATEMENT

A vehicle with higher turning radius face difficulty in parking and low speed cornering due to its higher wheel base and track width, but the passenger prefer the vehicle to be higher wheelbase and track width as It gives good comfort while travelling. In this scenario four wheel steering will be effective as the turning radius will be decreased for the same vehicle of higher wheel base. In this project a benchmark vehicle is considered and four wheel steering is implemented without change in dimension of the vehicle and reduction in turning radius is achieved. The main problem associated in city areas is traffic. This condition is very time consuming and also sometimes it is difficult to come out in the emergency situations for example of hospital or fire safety conditions.

Here Fig.(1) shows the traffic at the area considered. Sometimes it is difficult to park a vehicle in condition when two car parked one to another spaced between them. Thus this condition also consumes times for the life style. Also there may be chance of Sudden brakeage and chance of accident and damage for the vehicle.

Fig. 1 shows the problem associated in parking at certain situation.

Figure 2: Parking problem

III. LITERATURE SURVEY

Jaishnu Moodily, et al.: The idea of 360 degree wheel rotation load carry vehicle is analyzed from; presented a 360 degree rotating car to overcome the problem of parking space. This car has zero degree turning radius of a vehicle implies the vehicle rotating about an axis passing through the center of gravity of vehicle i.e. the vehicle turning at the same place, where it is standing. No extra space is required to turn the vehicle. So vehicle is to be turned in the space equal to the length of the vehicle itself. In this presentation, so got idea of 360 degree wheel rotation vehicle and have plane to make 360 degree wheel rotation load carry vehicle, this vehicle is to be used in different area like industries, hospital, railway platform, etc.

Sudip Kachhia :Sudip presented a 360 degree rotating vehicle to overcome the problem of parking space. This project is about design of 360 degree rotating car to move in all direction. This design provides better comfort and also saves the time of customers, that's why it is also the reliable for the customer. As it is also battery operated car thus no fuel is required. Hence it is economical to the environment. This also reduces the cost of the car, and also got idea to use battery to operate this vehicle.

K. Lohith: Lohith presented a four wheel steering system for a car. In four wheel steering the rear wheels turn with the front wheels thus increasing the efficiency of the vehicle. The direction of steering the rear wheels relative to the front wheels depends on the operating conditions. At low speed wheel movement is pronounced, so that rear wheels are steered in the opposite direction to that of front wheels with the use of DC motor to turn left and right. In this presentation, the use of DC motor is to rotate the wheels 90 degree left and 90 degree right from original position.

Er. Amitesh Kumar: Mr.Kumar presented zero turn four wheel steering system, the various functions of the steering wheel are, to control the angular motion the wheels, direction of motion of the vehicle, to provide directional stability of the vehicle while going straight ahead, to facilitate straight ahead condition of the vehicle after completing a turn, the road irregularities must be damped to the maximum possible extent. This project the use of steering is to rotate front wheels.

SH. Azadi and Z. Taherkhani:Autonomous Parallel Parking of Car Based Parking Space Detection and Fuzz Controller International Journal of Automotive Engineering Vol.2 Number 1 January 2012.

The research in car parking problem is derived from general motion planning problem and its usually defined as finding a path that connect the initial configuration to the final one with collision free capabilities and by considering non homonymic constraints. Using our model we present a solution to the autonomous parallel parking problem Computation of a path to be followed to accomplish the parking maneuver. There is a sufficient space on the obstacle we choose to go. The obstacle avoidance and parking spot localization worked with a success rate of approximately 90%. We also would like to improve our actual parallel parking producer by alloying the robot make adjustment once it is parked.

Sathyabalan shows that the fabricated the four wheel steering can operate three mode operation. The project is to steer the vehicle according to the requirement. The four wheel steering is more required in critical roads and in desert roads. In this implementing three steering modes in a single vehicle and the modes can be changed as needed.

Lohith shows that the Four-wheel steering is a serious effort on the part of automotive design engineers to provide near-neutral steering. In certain cases like low speed cornering, vehicle parking and driving in city conditions with heavy traffic in tight spaces, driving would be very difficult due to vehicle's larger wheelbase and track width. Hence the requirement of a mechanism which results in less turning radius arises and it will be achieved by implementing four wheel steering mechanism instead of regular two wheel steering. The rear wheels were drawn out of phase to the front wheels. In order to achieve this, a mechanism which consists of two bevel gears and intermediate shaft which transmit 100% torque as well turns rear wheels in out of phase was developed.

IV. PROPOSED METHODOLOGY

FOUR MODES OF STEERING SYSTEM:

- Front wheel turn
- Short radius turn
- Parallel parking
- 360 degree turn

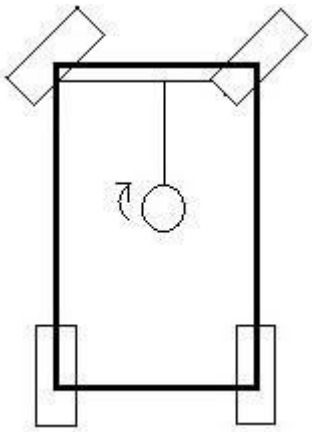

Figure 3: Front wheel turn

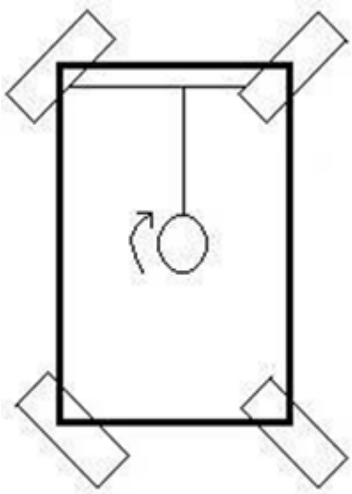

Figure 4: Short radius turn

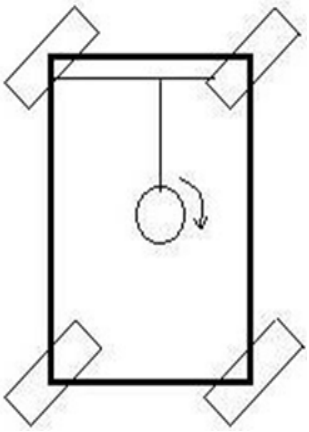

Figure 5: Parallel parking

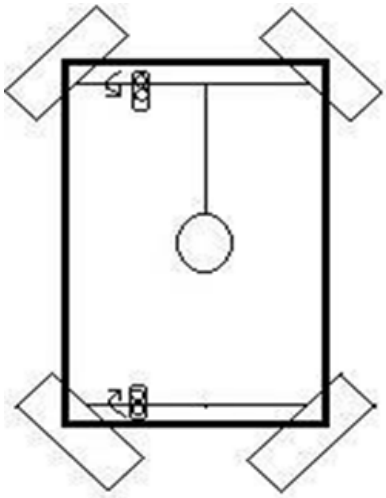

Figure 6: 360 degree turn

V. CONCLUSION

Thus we conclude that we can allowed vehicle to guide vehicle in all direction. 360 degree of rotating car and also we can guide in parallel direction. In recent time the advancement is made in automobiles. So, we have modified in such a way that it can save time and also easily work with many problem. This can give fast response and less space is required. The developed model is recommended for inclusion in the cars.

REFERENCES

[1] Automotive Control Systems (for engines, driveline, vehicle)

[2] Automotive Computer Controlled Systems

[3] AUTOMOTIVE MECHANICS BY W C

[4] Fundamentals of Vehicle Dynamics

[5] Neville, A., Stanton, Marsden P.(2001), From fly-by-wire to Drive-by-wire:Safety implications of automation in Vehicles , Automotive engineering, Vol.109, No.9, Pp.102 106.

[6] Brian T., Murray,D.,Ambrosis ,Joseph,W., Barbara J. C., System- Safety Process For By-Wire Automotive System, SAE TECHNICAL PAPER SERIES 2000-01-1056A.

[7] Feng, Y., and Gua, Y., Hubei Automatic Industries Institute, Shiyan,China ,Study of ideal

Steering Ratio for steer-by-wire system Based on Simulation Test.

[8] Chori S., Alonso J.J., and Kroo H.M.,Two-level multifidelity design optimization studies for supersonic jets, Journal of Aircraft, Vol 46,No.776-790.

[9] Cong ,Z., Jian, X.,Naveediqbal ,M.,(School of electrical engineering, Southwest Jiaotong University Chengdu, 61003), china,

[10] Eng. Brabec P, doc. Eng. Maly M, Eng Vozenilek R., Faculty of Mechanical Engineering –Technical University of Liberec,Czech Republic ,on “Steer-By-Wire simulation model”.

[11] Mechanical/Automobile students project---360 degree rotating car.

